CONSTRUCTION

Atmel ISP Development Board

SUBRAT KUMAR MALLIK

There are many microcontroller development kit available in the market, which are very costly. But there is a development board designed which is very simple in construction, programming and interface to pc. This is based on in system programmable (ISP) means you can program your ATMEL mcs 51 microcontroller. There is no need of external power source, you can connect this kit with your pc USB. This development kit can support AVR, ATMEGA,AND TINY with some well modification of the circuit. In this section will use AT89S52 which is very popular 8bit m/c in the market. Using. This development board you may able to use 10leds , 12 matrix keypad, 16*2 lcd, 8 seven segment display, stepper motor , and also ADC/DAC

Features

- It can support AT89S52, AT89S53, AT89S8252(dip 40 pins)
- Uses in system programmable, low voltage programming RS232
- No need of external power supply.
- No need of any tools or programmer devices
- Require one pc parallel port for programming .
- Software support in all windows os.
- USB based power supply
- Easy to construct your own PCB and development board.

ATMEL 89S52

This m/c is is very popular in engineering student , electronics professional and also in automation industries. This manufactured by ATMEL corporation. Its is 8bit M/C. Means its word size is 8bit. It's a low power , high performance CMOS 8bit m/c with 8k bytes of in system programmable flash memory. This device is manufactured using atmels high density nonvolatile memory technology and it is compatible with the industry standard 8051 instruction set and pin out

Features of ATMEL 89S52

compatible with mcs 51 products
8k bytes flash memory
1000 write/erase cycle
Fully static operation (0hz to 33mhz)
Three level program memory lock
256* 8-bit internal RAM
32 programmable i/o lines
Three 16-bit timer/counter
Watch dog timer
Dual data pointer
Eight interrupt source
Fast programming time
Green (pb/halide-fee) packaging option

Hardware Description

This development board interfaced with LEDs, steppe motor . LCD, Seven segment display. Matrix keypad

LED CIRCUIT BOARD:

This circuit consists of 8 6mm LEDs (red or green). The negative pin of the LEDs are connecter to P0 through current limiting resisters. The positive terminal of the LEDs are connected to the collector of q1 transistor which acts as a switch to provide positive supply to the LEDs common terminal (as shown in fig-1)

Our main aim is to connect the transistor that, LED, segment display , LEDs, all are connected to the p0. if you want to display the LEDs at the same time segment display , LCD also activated. Due to this reason we have used one transistor (for LCD, segment display. LEDs). When you want to display LEDs just low (0) the corresponding base of the transistor and high (1) other base of the transistors. Later we will do its source code for the LEDs display.

LEDS	PORTS OF THE M/C
1	P0.0
2	P0.1
3	P0.2

4	P0.3
5	P0.4
6	P0.5
7	P0.6
8	P0.7

Base of controlling transistor is connected to the p1.0.

4*3 matrix keypad:

key pads are organized in a matrix of row and columns. The M/C accesses both row and column through ports. When a key is pressed a row and a column can make a contact; otherwise there is no connection between rows and columns. As fig-1 shown 4*3 matrix keypad connected to the port 2. if no key has been pressed reading the input port will as 1. if any key is pressed one of the column will have 0.

Rows/columns	port no
Col 1	p2.1
Col 2	p2.2
Col 3	p2.3
Col 4	p2.4
Row 1	p2.5
Row 2	p2.6
Row 3	p2.7

Stepper Motor Interfacing :

A stepper is a widely used devices that translates electrical pulses in to mechanical movement. Every stepper has a permanent magnet rotor stator. There are commonly four startor windings ..this type of stepper motor is called four phase stepper motor

In this development kit stepper motor is connect to M/C through ULN2003A. It's a high voltage high current Darlington arrays ic. Its features is ttl, dtl, pmos , or cmos . its o/p current up to 500 ma , o/p voltage to 95v, dip package. As fig-1 shows red, brown, green, white, terminals of the stepper are connected to the 15,14,12,13 and pin no 16 is connected to collector of a npn transistor. That you can activate it according to your need by providing a low pulse to base of the transistor. Pin no 2,3,4,5, of uln2003a are connected to port p1.1,p1.2,1.3,p1.4

Seven Segment Display

There are 8 segment display(common anode) are placed in the circuit diagram. The common point of

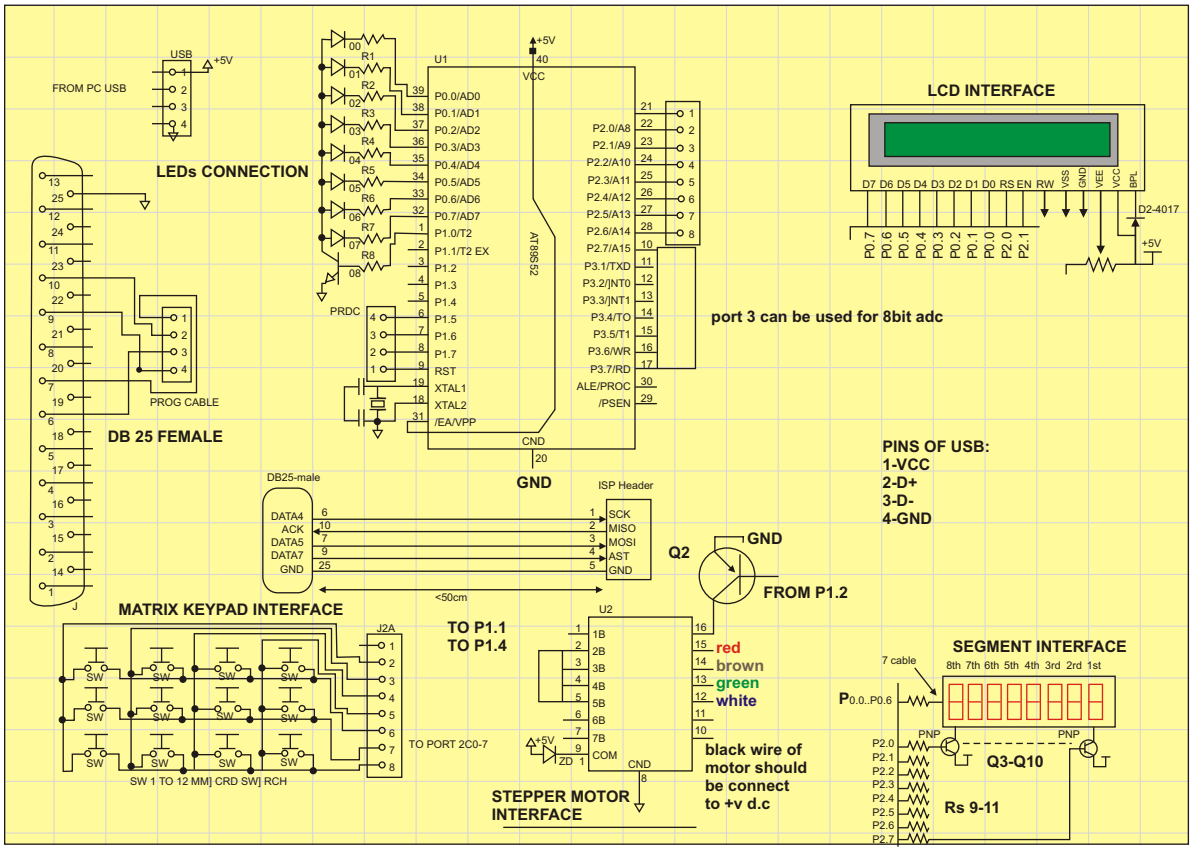

Fig1-circuit diagram of ATMEL ISP developed boaed

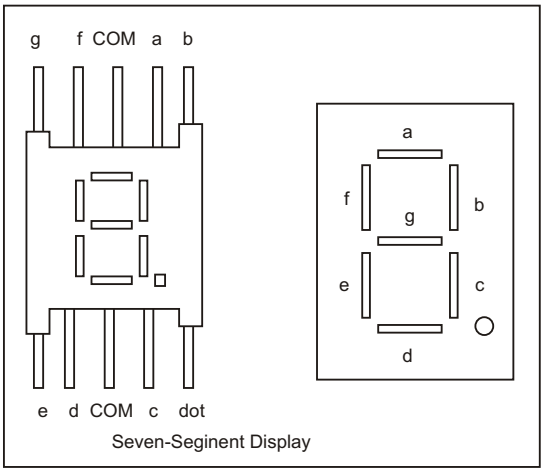

Fig-2 shows the pin diagram of a segment display(common anodePin a,b,c,d,e,f,g are connected to p0.0 to p0.6 and common pins are connected to p2.0 to p2.7

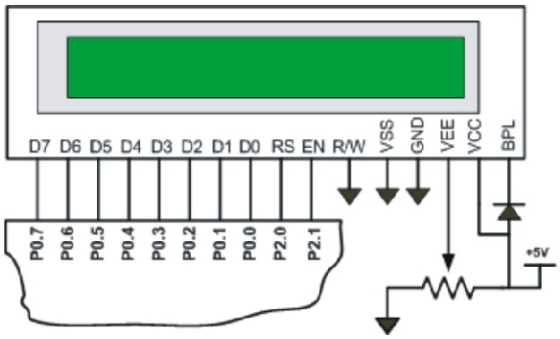

each segment display are connected to collector of the transistor. So you can on/off your desire segment display

PINS OF 16*2 LCD

FIG-3 pins diagram of 16*2 LCD.
Pin no1: vss , ground
Pin no2: vdd, +5v d.c
Pin no3: v0, power for lcd
Pin no 4: rs, resister select, that h for data input, low for instruction input .
Pin no 5: r/w not connected
Pin no 6: enable
Pins 7-14 DB0 to DB14 , data bus usually 4 or 8 bit
Pin no15:contrast of lcd
Pin no 16: +5v d.c

Software Installation and Download

8051(IDE) integrated development environment can be downloaded from www.8051.com for free. And its burner can be downloaded from www.sixca.com for free.

Source Code For LED Display

ITS our first program to display leds with very easy

Component List

Semiconductor devices
IC1 AT89S52, IC2 ULN2003A
Trasisters1,2,3,4,5 ….10 - BC557
D1- IN4148
LEDs1-8 - RED, 3mm
Segment Display1-8
RED, Common Cathode
Capacitors
C1,2 - 22MF
Resister
R1,R17- 22KOHM
VR1 - 1OKOHM
Miscellaneous
KEY 1-12
Micro Switch
16*2 LCD Display
Stepper Motor
USB Cable 1
DB25 - Male and Female Socket
One Printer Cable
Connector 8 Pin - 4
Connector 4 Pin

steps

```
;-----------------------------------------------------------------
; DEVLOPED BY SUBRAT KUMAR MALLIK
;-----------------------------------------------------------
; HARDWARE DICLATATION
  LEDPORT EQU P0
  LEDTRAN EQU P1.0
; RAM DICLARATION
; VAR EQU 34H
; FLAGBIT 00H
  ORG 0000H
  AJMP POWERON
  ORG 0003H
    RETI
  ORG 000BH
```

Fig. 4 Burner Softwear

```
      RETI
   ORG 0013H
      RETI
   ORG 0023H
      RETI
   ORG 002BH
      RETI
   ORG 0033H
POWERON:MOV SP,#70H
        MOV P0,#0FFH
        MOV P1,#0FFH
        MOV P2,#0FFH
        MOV P3,#0FFH
        MOV IE,#00H
        MOV IP,#00H
CLR LEDTRAN
MAINLOOP:
         MOV p0,#11110000B
ACALL DELAY
         MOV P0,#0000111
ACALL DELAY
         MOV P0,#00000000
ACALL DELAY
        SJMP MAINLOOP

DELAY:  MOV R7,#200D
LABLE3: MOV R6,#100D
LABLE2: MOV R5,#50D
LABLE1 : DJNZ R5, LABLE1
        DJNZ R6, LABLE2
        DJNZ R7, LABLE3
       RET

SOURCE CODE FORSEGMENT DISPLAY
;-----------------------------------------------------------
DEVLOPED BY SUBRAT KUMAR MALLIK
;-----------------------------------------------------
; HARDWARE DECLARATION
   SEGMENTDATA EQU P0
   SEGMENTTRAN1 EQU P2.0
   SEGMENTTRAN2 EQU P2.1
   SEGMENTTRAN3 EQU P2.2
   SEGMENTTRAN4 EQU P2.3
;RAM DECLARATION
  UNIT EQU 30H
  TENS EQU 31H
  HAND EQU 32H
  THAN EQU 33H
;VAR EQU 34H
;FLAGBIT 00H
   ORG 0000H
  ; AJMP POWERON
   ORG 0003H
      RETI
   ORG 000BH
      RETI
   ORG 0013H
      RETI
   ORG 0023H
      RETI
   ORG 002BH
      RETI
   ORG 0033H
POWERON:MOV P0,#70H
        MOV P0,#0FFH
        MOV P1,#0FFH
        MOV P2,#0FFH
        MOV P3,#0FFH
        MOV IE,#00H
        MOV IP,#00H
        MOV UNIT,#04H
        MOV TENS,#03H
        MOV HAND,#02H
        MOV THAN,#01H
CLR  SEGMENTTRAN2 P2.3
MAINLOOP: ACALL DISPLAY
           SJMP MAINLOOP
  DISPLAY:
           MOV DPTR,#TABLE
           MOV A,UNIT
           MOVC A,@A+DPTR
           MOV SEGMENTDATA,A
           CLR, SEGMENTTRAN1
           ACALL DELAY
           SETB SEGMENTTRAN1
SJMP MAINLOOP
DELAY:  MOV R7,#200D
LABLE3: MOV R6,#100D
```

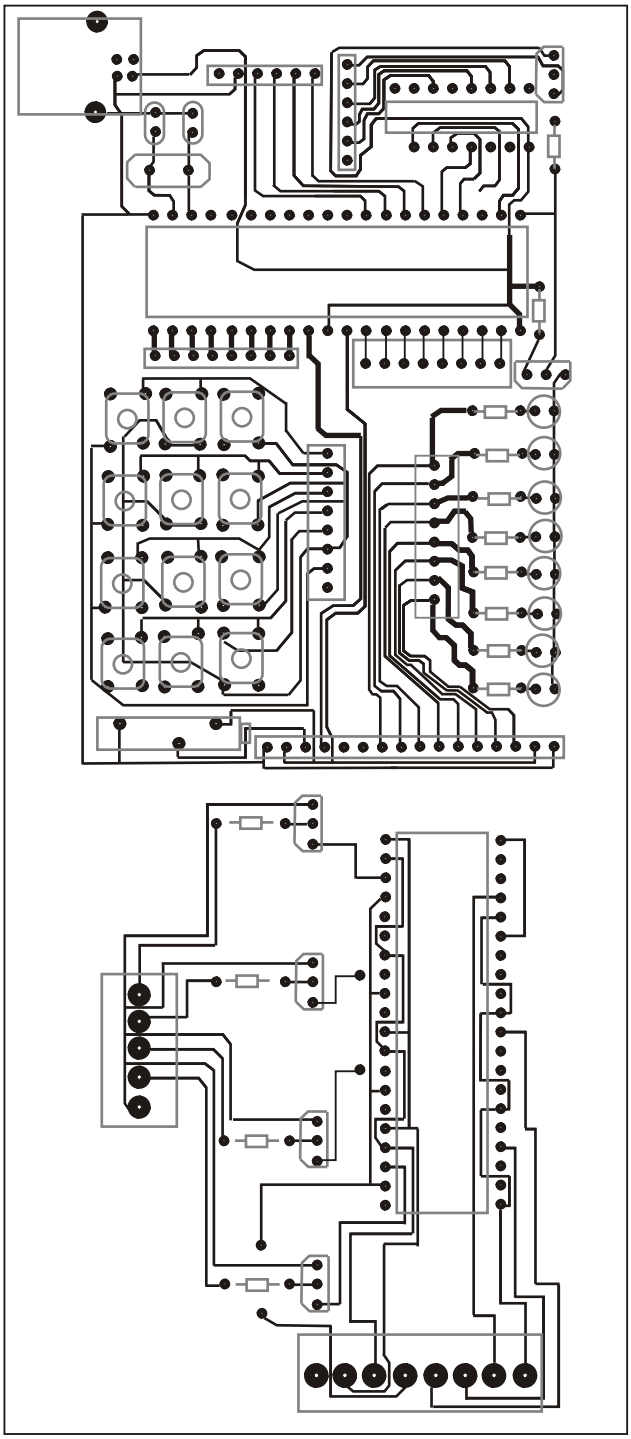

PCB layout (50%small)

```
LABLE2: MOV R5,#50D
LABLE1: DJNZ R5, LABLE1
        DJNZ R6, LABLE2
        DJNZ R7, LABLE3
        RET
  TABLE:
        DB    0C0H;0
        DB    0F9H;1
;-----------------------------------------------------------------------
;-----------------------------------------------------------------------
```

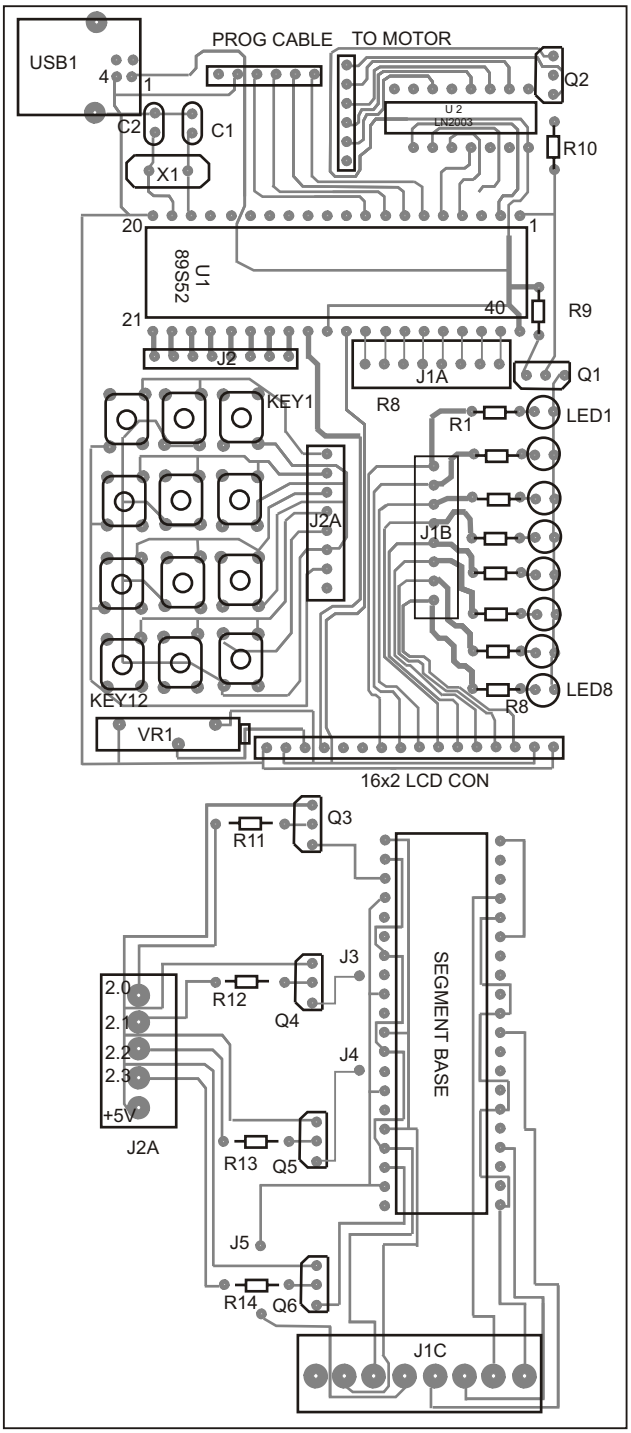

Component layout (50%small)

```
;SOURCE CODE FOR DISPLAY SUBRAT MALLIK IN LCD
;DEVLOPED BY SUBRAT KUMAR MALLIK ;-------------------------------------
-------------------------------------
;-----------------------------------------------------------------------
;HARDWARE DICLATATION LCDPORT EQU P0 LCDRS    EQU P2.0 LCDE
EQU P2.1 ;RAM DICLARATION ;VAR EQU 34H
;FLAGBIT 00H
ORG 0000H AJMP POWERON ORG 0003H  RETI ORG 000BH
RETI
ORG 0013H
RETI
ORG 0023H
RETI
ORG 002BH
RETI
ORG 0033H
POWERON:MOV SP,#70H
MOV P0,#0FFH
MOV P1,#0FFH
MOV P2,#0FFH
MOV P3,#0FFH
MOV IE,#00H
MOV IP,#00
ACALL LCDINIT
ACALL SECDELAY
ACALL LCDINIT
ACALL LCDINIT
MOV DPTR,#SLOGA
ACALL DSPLSLGN
MAINLOOP: SJMP MAINLOOP  LCDINIT:
MOV A,#01H
ACALL LCDCMSEND  ;LCDCOM SEND
ACALL SDELA
MOV A,#02H
ACALL LCDCMSEND  ;LCDCOM SEND ACALL SDELAY
MOV A,#30H
ACALL LCDCMSEND  ;LCDCOM SEND
ACALL SDELAY
MOV A,#30H
ACALL LCDCMSEND  ;LCDCOM SEND
ACALL SDELAy
MOV A,#30H
ACALL LCDCMSEND  ;LCDCOM SEND ACALL SDELAY MOV A,#06H
ACALL LCDCMSEND  ;LCDCOM SEN
ACALL SDELAY
MOV A,#0FFH
ACALL LCDCMSEND  ;LCDCOM SEND
ACALL SDELAY
MOV A,#02H
ACALL LCDCMSEND  ;LCDCOM SEND
ACALL SDELAY
MOV A,#03H
ACALL LCDCMSEND  ;LCDCOM SEND
ACALL  SDELAY
RET
LCDCMSEND:   CLR LCDR
ACALL SDELA
MOV LCDPORT,
ACALL SDELA
SETB LCDE
CLR LCDE DSPLSLGN:    MOV R0,#16D
MOV R1,#00H
GOBACK:      MOV A,R1
MOVC A,@A+DPTR
ACALL LCDDATASEN
ACALL SDELAY
INC R1
DJNZ R0,GOBACK
RET
LCDDATASEND:  SETB LCDR
ACALL SDE
MOV LCDPORT,

ACALL SDELAY
CLR LCDE SDELAY:
LABLE3: MOV R6,#10D
LABLE2: MOV R5,#10D
LABLE1: DJNZ R5, LABLE
```

```
DJNZ R6, LABLE2
RET
SECDELAY:
LABLE6: MOV R6,#10D
LABLE5: MOV R5,#10D LABLE4: DJNZ R5,
LABLE
DJNZ R6, LABLE5
RET SLOGAN: DB 'SUBRAT MALLIK'
RET
----------------------------------------------------------
;----------------------------------------------------------
;ROTATE A STEPPER MPTPR CLOCKWISE ;DEVLOPED BY SUBRAT KUMAR
MALLIK ;-----------------------------------------------------------
;-----------------------------------------------------------------  ;HARDWARE
DICLATATIO
; RED EQU P1.1
; BROWN EQU P1.2
; GREEN EQU P1.3
; WHITE EQU P1.4
;RAM DICLARATION
;VAR EQU 34H
;FLAGBIT 00H
ORG 0000H
; AJMP POWERON
ORG 0003H
RETI
ORG 000BH
RETI
ORG 0013H
RETI
ORG 0023H
RETI
ORG 002BH
RETI
ORG 0033H POWERON:
MOV SP,#70H
MOV P0,#0FFH
MOV P1,#0FFH
MOV P2,#0FF
MOV P3,#0FF
MOV IE,#00
MOV IP,#00H
MAINLOOP:
MOV P1.1,#10111111
ACALL DEL
MOV P1.2,#1101111
ACALL DELAY
MOV P1.3,#11101111
ACALL DELA
MOV P1.4,#11110111
ACALL DELAY
SJMP MAINLOOP
DELAY:  MOV R7,#200D
LABLE3: MOV R6,#100D
LABLE2: MOV R5,#50D
LABLE1: DJNZ R5, LABLE
DJNZ R6, LABLE
DJNZ R7, LABLE
RET
;----------------------------------------------------------
;----------------------------------------------------------
;KEY WITH LED
;DEVLOPED BY SUBRAT KUMAR MALLIK ;-------------------------------------
-------------------
;-----------------------------------------------------------------  ;  HARDWARE
DECLARATION
LEDPORT EQU P0LEDTRAN EQU P1.6
ROW1    EQU P20
ROW2    EQU P2.1
ROW3    EQU P2.2
ROW4    EQU P2.3
COL1    EQU   P
COL2    EQU P2.1
COL3    EQU P2.2
;RAM DECLARATION
KEYNO EQU 35H
;VAR EQU 34H
;FLAGBIT 000
ORG 0000H
 ; AJMP POWERON
ORG 0003H
RETI
ORG 000BH
RETI
ORG 0013H
RETI
ORG 0023H
RETI
ORG 002BH
RETI
ORG 0033H
POWERON:MOV SP,#70H
MOV P0,#0FFH
MOV P1,#0FFH
MOV P2,#0FFH
MOV P3,#0FFH
MOV IE,#00H
MOV IP,#00H
CLR LEDTRAN    .
MAINLOOP:
ACALL KEYCHECK
KEYCHECK: SETB COL
SETB COL2
SETB COL3
CLR  COL1
JNB ROW1,  LABEL1
JNB ROW2,  LABEL2
JNB ROW3,  LABEL3
JNB ROW4,  LABEL4
SETB COL1
CLR  COL2
JNB ROW1,  LABEL5
JNB ROW2,  LABEL6
JNB ROW3,  LABEL7
JNB ROW4,  LABEL8
SETB COL2
CLR  COL3
JNB ROW1,  LABEL9
JNB ROW2,  LABEL10
JNB ROW3,  LABEL11
JNB ROW4,  LABEL12
SETB COL3
LABEL1: MOV KEYNO,#01H
RETI
LABEL2: MOV KEYNO,#02H
RETI
LABEL3: MOV KEYNO,#03H
RETI
LABEL4: MOV KEYNO,#04H
RETI
LABEL5: MOV KEYNO,#05H
RETI
LABEL6: MOV KEYNO,#06H
RETI
LABEL7: MOV KEYNO,#07H
RETI
LABEL8: MOV KEYNO,#08H
RETI
LABEL9: MOV KEYNO,#09H
RETI
LABEL10: MOV KEYNO,#10H
RETI
LABEL11: MOV KEYNO,#11H
RETI
LABEL12: MOV KEYNO,#12H
RETI
MOV A,KEYNO
CPL A
MOV P0,A
RETI
END.
```